Ibanez EDB-405
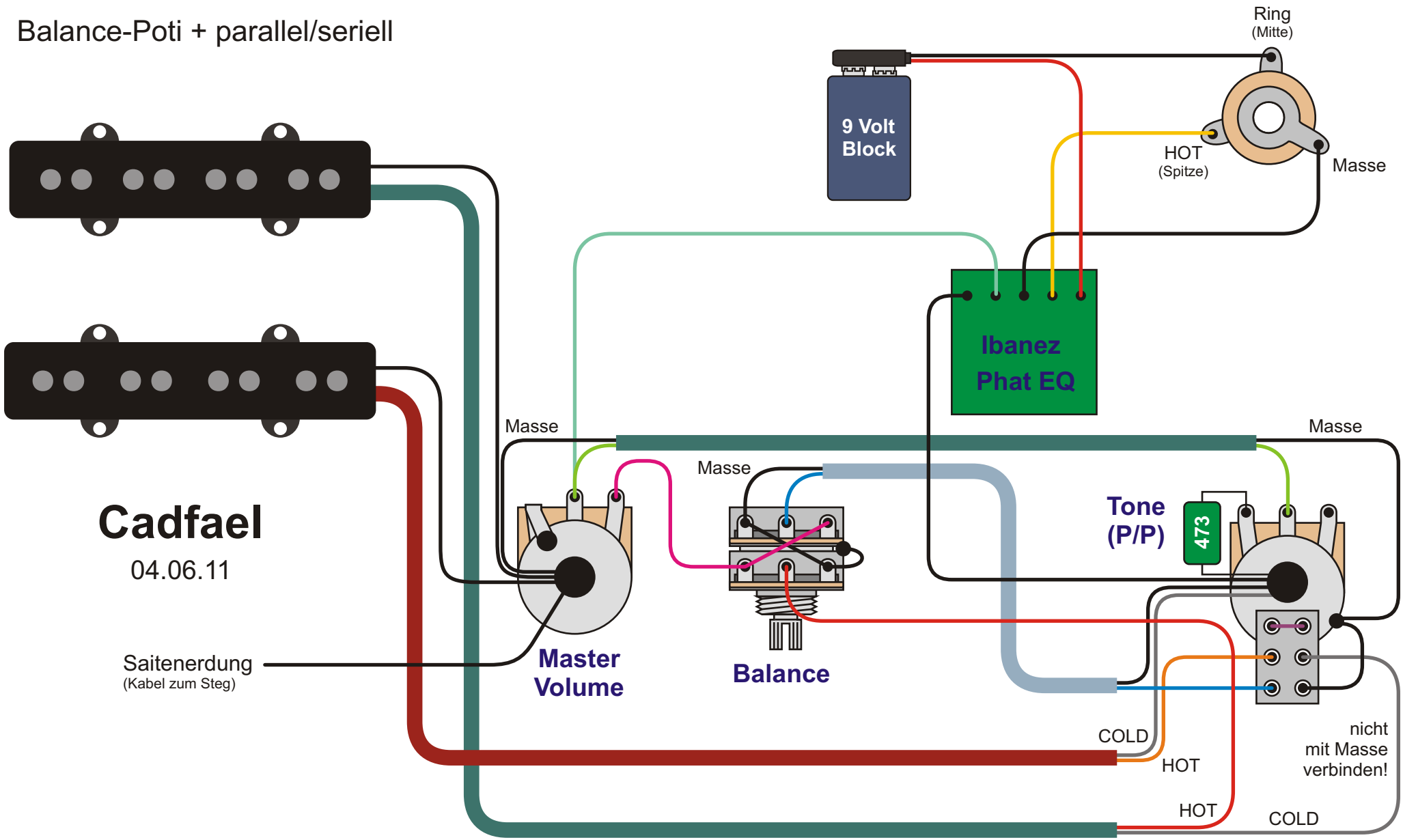
Balance-Poti + parallel/seriell