REVISIONS			
REV.	DESCRIPTION	DATE	APPROVED
A	EC 2630	21-MAR-01	dBL

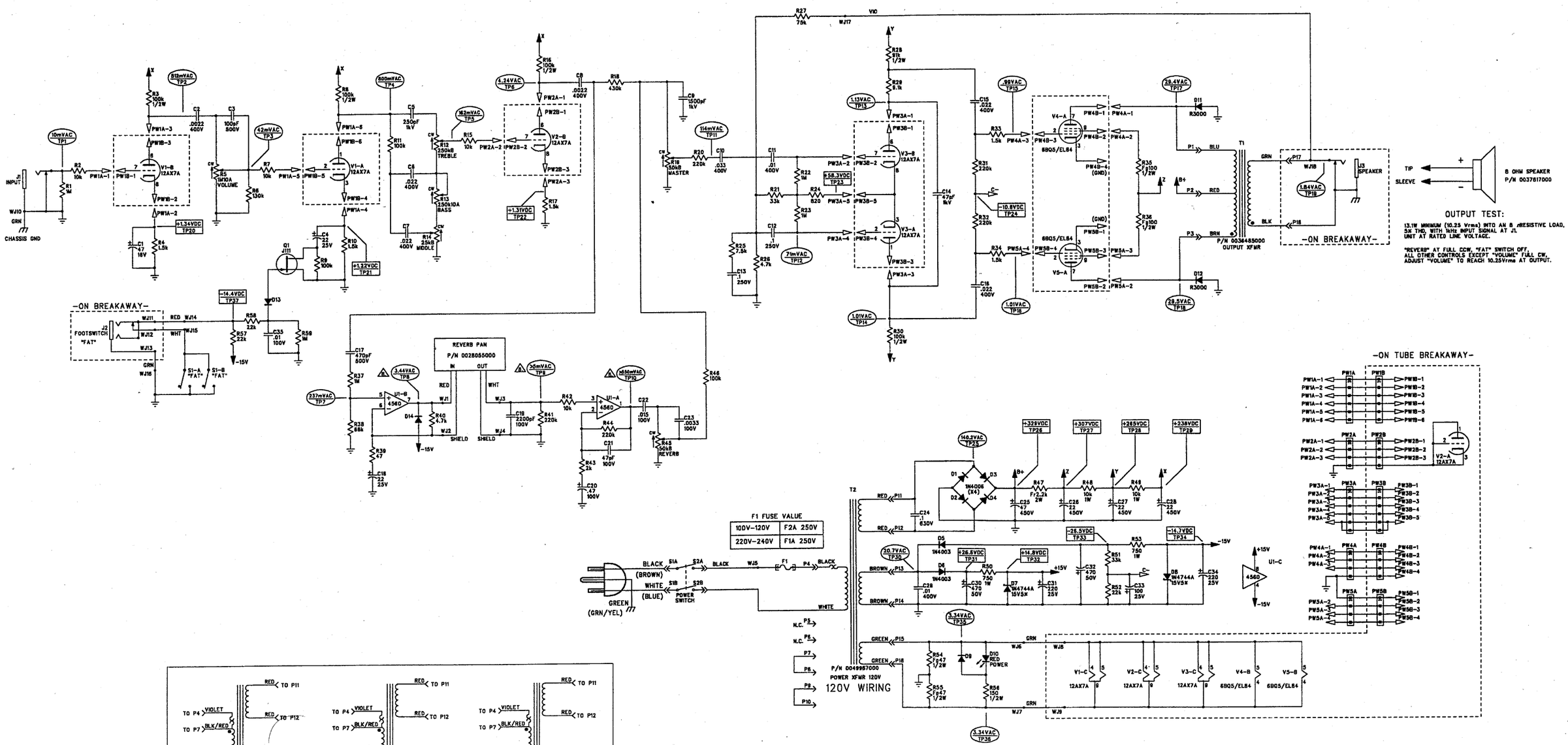

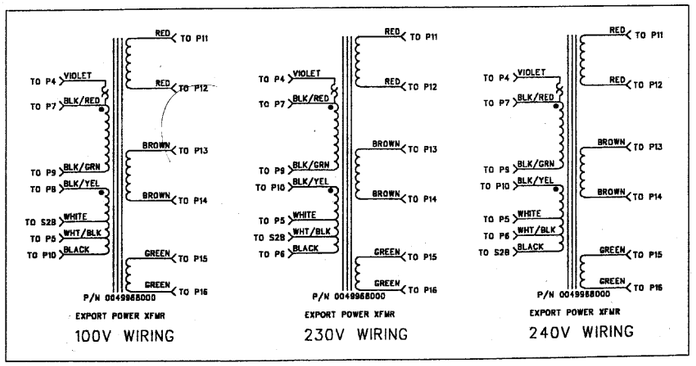

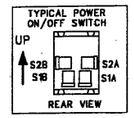

8. TP8 - TP10 VARY AND ARE DEPENDENT ON SPECIFIC EXCITATION FREQUENCY AND PARTICULAR REVERB PAN FREQUENCY RESPONSE.
7. AC AND DC VOLTAGES READ WITH RESPECT TO GROUND WITH A DVM UNDER THE FOLLOWING CONDITIONS:
   UNIT AT RATED LINE VOLTAGE
   NO INPUT SIGNAL (TP20-TP37 ONLY)
   VOLTAGES MAY VARY +/- 20%
   ADDITIONAL CONDITIONS FOR TP1-TP19:
   10mVrms, 1kHz SINEWAVE INPUT SIGNAL AT J1
   8Ω RESISTIVE LOAD CONNECTED AT J3
   REVERB PAN CONNECTED
   "REVERB" AT FULL CCW, "FAT" SWITCH OUT (OFF)
   ALL OTHER CONTROLS AT 50% ROTATION.
6. LAST REFERENCE: C35, D14, F1, J3, P18, R59, S1, T2, TP37, U1, V5, WJ18.
5. THIS SCHEMATIC IS FOR PCB FABRICATION P/N 0057276000 AND PCB ASSEMBLY P/N 0057277000.
4. ALL DIODES ARE 1N4448.
3. ALL POLARIZED CAPACITORS IN uF, 20%; 50V MINIMUM.
2. ALL UNPOLARIZED CAPACITORS IN uF, 10% OR BETTER; 50V MINIMUM. (POWER SUPPLY BYPASS CAPACITORS ARE 20%).
1. ALL RESISTORS IN OHMS, 5%; 1/4W.

NOTES: (UNLESS OTHERWISE NOTED)

THIS DOCUMENT CONTAINS INFORMATION OF A PROPRIETARY NATURE TO FENDER MUSICAL INSTRUMENTS AND IS SUBMITTED TO YOU IN CONFIDENCE AND SHALL NOT BE DISCLOSED OR TRANSMITTED TO OTHERS WITHOUT AUTHORIZATION FROM FENDER MUSICAL INSTRUMENTS.

Fender MUSICAL INSTRUMENTS
Corona, CA U.S.A.

CHECKED BY: [signature]
DATE: 23-APR-01
APPROVED BY: dBL
DATE: 4/20/01
DRAWN: D. LEWIS ENGR: D. LEWIS
DATABASE FILE: Z486S.SCH

TITLE: SERVICE DIAGRAM, COMBINED (schematic) BLUES JUNIOR

SIZE D | DRAWING NUMBER 0057275000 | REV. A

RELEASE DATE: 21-MAR-01 | SHEET: 1 OF 2